TR9500HR Treadmill

GK26-00023-XXXX

S/N 309479-313975

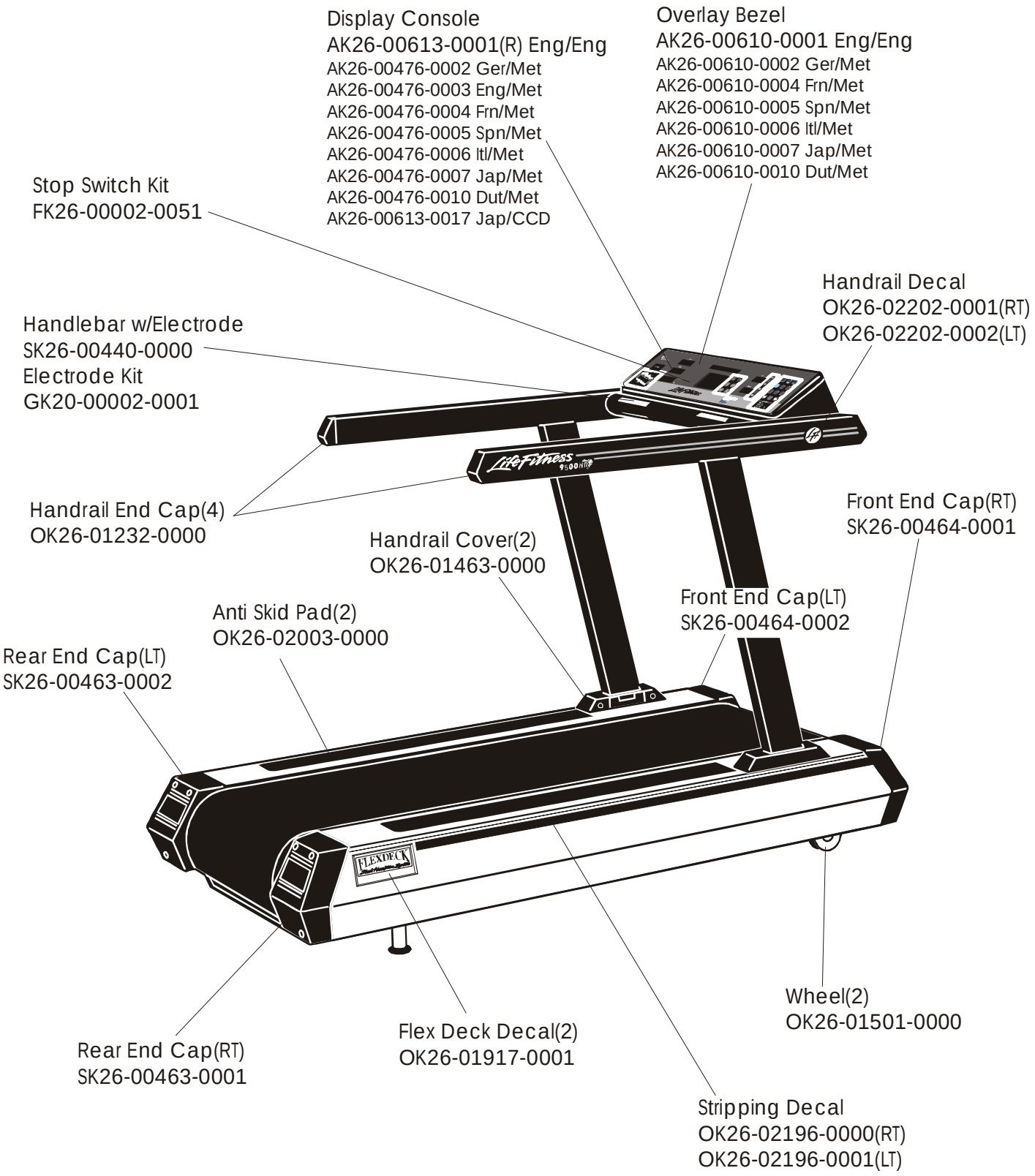

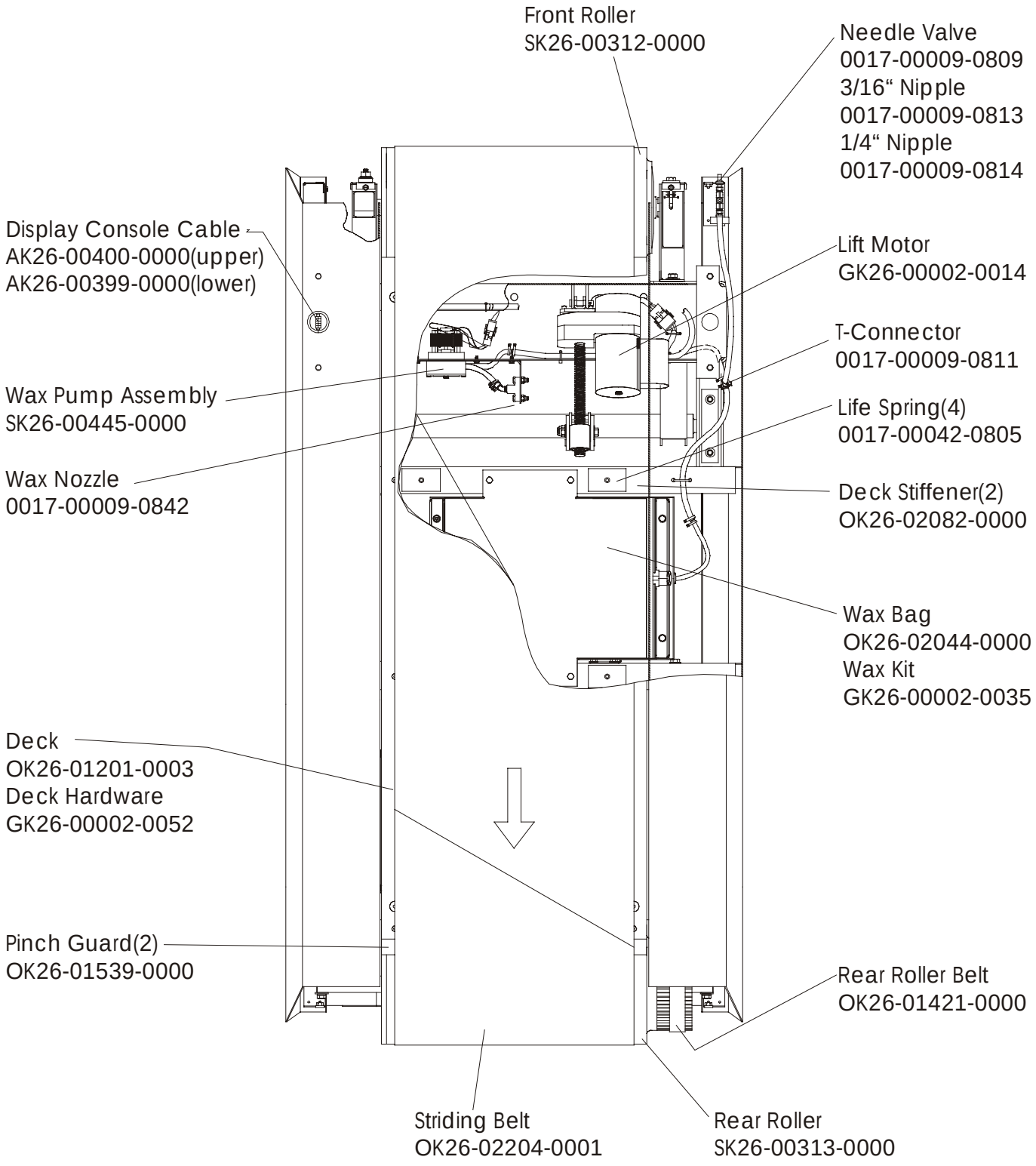
Front Roller
SK26-00312-0000
Needle Valve
0017-00009-0809
3/16“ Nipple
0017-00009-0813
1/4“ Nipple
0017-00009-0814
Display Console Cable
AK26-00400-0000(upper)
AK26-00399-0000(lower)
Lift Motor
GK26-00002-0014
T-Connector
0017-00009-0811
Wax Pump Assembly
SK26-00445-0000
Life Spring(4)
0017-00042-0805
Wax Nozzle
0017-00009-0842
Deck Stiffener(2)
OK26-02082-0000
Wax Bag
OK26-02044-0000
Wax Kit
GK26-00002-0035
Deck
OK26-01201-0003
Deck Hardware
GK26-00002-0052
Pinch Guard(2)
OK26-01539-0000
Rear Roller Belt
OK26-01421-0000
Striding Belt
OK26-02204-0001
Rear Roller
SK26-00313-0000

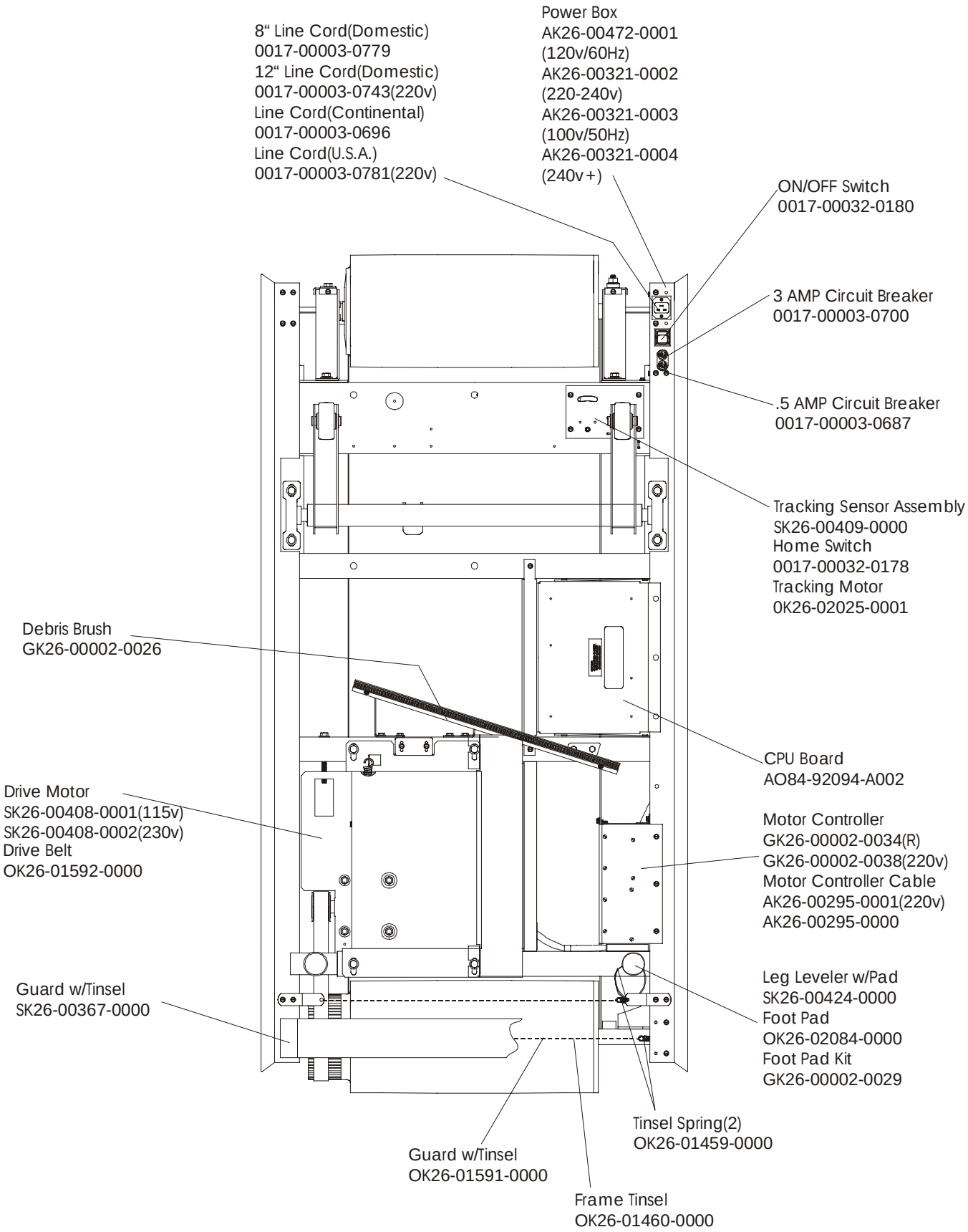
8“ Line Cord(Domestic)
0017-00003-0779
12“ Line Cord(Domestic)
0017-00003-0743(220v)
Line Cord(Continental)
0017-00003-0696
Line Cord(U.S.A.)
0017-00003-0781(220v)
Power Box
AK26-00472-0001
(120v/60Hz)
AK26-00321-0002
(220-240v)
AK26-00321-0003
(100v/50Hz)
AK26-00321-0004
(240v+)
ON/OFF Switch
0017-00032-0180
3 AMP Circuit Breaker
0017-00003-0700
.5 AMP Circuit Breaker
0017-00003-0687
Tracking Sensor Assembly
SK26-00409-0000
Home Switch
0017-00032-0178
Tracking Motor
0K26-02025-0001
Debris Brush
GK26-00002-0026
CPU Board
AO84-92094-A002
Drive Motor
SK26-00408-0001(115v)
SK26-00408-0002(230v)
Drive Belt
OK26-01592-0000
Motor Controller
GK26-00002-0034(R)
GK26-00002-0038(220v)
Motor Controller Cable
AK26-00295-0001(220v)
AK26-00295-0000
Guard w/Tinsel
SK26-00367-0000
Leg Leveler w/Pad
SK26-00424-0000
Foot Pad
OK26-02084-0000
Foot Pad Kit
GK26-00002-0029
Tinsel Spring(2)
OK26-01459-0000
Guard w/Tinsel
OK26-01591-0000
Frame Tinsel
OK26-01460-0000